Demon Clock Paper Model—License Agreement

By downloading this file and the accompanying Licensed Materials, the end user ("Licensee") agrees to conform to this License Agreement (this "Agreement") with Robert Nava, the Disney Experience website [www.disneyexperience.com] ("Licensor").

I. Content of Licensed Materials; Grant of License

The materials that are the subject of this Agreement shall consist of the Demon Clock Paper Model in electronic and physical form (hereinafter referred to as the "Licensed Materials").

Licensee acknowledges that the copyright and title to the Licensed Materials and any trademarks or service marks relating thereto remain with Licensor and/or its suppliers. Licensee shall not have right, title or interest in the Licensed Materials except as expressly set forth in this Agreement.

Licensor hereby grants to Licensee non-exclusive use of the Licensed Materials in accordance with this Agreement.

II. Access of Licensed Materials to Licensee

Licensor will provide the Licensed Materials to the Licensee in the following manner:

File Transfer. Copies of the Licensed Materials will be provided to the Licensee through the Disney Experience website at the sole discretion of the Licensor.

III. Fees

Licensee is required to make no payment to Licensor for use of the Licensed Materials.

IV. Authorized Use of Licensed Materials

Authorized Uses. Licensee may make all use of the Licensed Materials as is consistent with the Fair Use Provisions of United States and international law. Nothing in this Agreement is intended to limit in any way whatsoever Licensee's rights under the Fair Use provisions of United States or international law to use the Licensed Materials.

The Licensed Materials may be used for purposes of research, education or other non-commercial use as follows:

Archival/Backup Copy. Upon request of Licensee, Licensee may create one (1) copy of the entire set of Licensed Materials to be maintained as a backup or archival copy during the term of this Agreement.

V. Specific Restrictions on Use of Licensed Materials

Unauthorized Use. Licensee shall not knowingly permit anyone other to use the Licensed Materials.

Modification of Licensed Materials. Licensee shall not modify or create a derivative work of the Licensed Materials without the prior written permission of Licensor.

Removal of Copyright Notice. Licensee may not remove, obscure or modify any copyright or other notices included in the Licensed Materials.

Distribution Rights. Licensee has no rights to transfer, host, or re-distribute the Licensed Materials or its derivatives under any circumstances or by any means available now or in the future.

Commercial Purposes. Other than as specifically permitted in this Agreement, Licensee may not use the Licensed Materials for commercial purposes, including but not limited to the sale of the Licensed Materials or bulk reproduction or distribution of the Licensed Materials in any form.

VI. Licensor Performance Obligations

Availability of Licensed Materials. Licensor shall make the Licensed Materials available to Licensee at his/her discretion.

Notification of Modifications of Licensed Materials. Licensee understands that from time to time the Licensed Materials may be added to, modified, or deleted from by Licensor and/or that portions of the Licensed Materials may migrate to other formats.

Completeness of Content. Where applicable, Licensor will inform Licensee of instances where online content differs from the print versions of the Licensed Materials.

Where applicable, Licensor shall use reasonable efforts to ensure that the online content is at least as complete as print versions of the Licensed Materials, represents complete, accurate and timely replications of the corresponding content contained within the print versions of such Materials, and will cooperate with Licensee to identify and correct errors or omissions.

Withdrawal of Licensed Materials. Licensor reserves the right to withdraw from the Licensed Materials any item or part of an item for which it no longer retains the right to publish, or which it has reasonable grounds to believe infringes copyright or is defamatory, obscene, unlawful or otherwise objectionable.

VII. Licensee Performance Obligations

Protection from Unauthorized Use. Licensee shall use reasonable efforts to protect the Licensed Materials from any use that is not permitted under this Agreement. In the event of any unauthorized use of the Licensed Materials by an Authorized User, (a) Licensor may terminate such Authorized User's access to the Licensed Materials, (b) Licensor may terminate the access of the Internet Protocol ("IP") address(es) from which such unauthorized use occurred, and/or (c) Licensee shall terminate such Authorized User's access to the Licensed Materials upon Licensor's request. Licensor shall take none of the steps described in this paragraph without first providing reasonable notice to Licensee and cooperating with the Licensee to avoid recurrence of any unauthorized use.

VIII. Early Termination

In the event that either party believes that the other materially has breached any obligations under this Agreement, or if Licensor believes that Licensee has exceeded the scope of the License, such party shall so notify the breaching party in writing. The breaching party shall have 1 week from the receipt of notice to cure the alleged breach and to notify the non-breaching party in writing that cure has been effected. If the breach is not cured within the 1 week, the non-breaching party shall have the right to terminate the Agreement without further notice.

Upon Termination of this Agreement for cause online access to the Licensed Materials by Licensee and shall be terminated. Authorized copies of digital Licensed Materials must be destroyed immediately.

IX. Perpetual License

Except for termination for cause, Licensor hereby grants to Licensee a nonexclusive, royalty-free, perpetual license to use any Licensed Materials that were accessible during the term of this Agreement. Such use shall be in accordance with the provisions of this Agreement. The means by which Licensee shall have access to such Licensed Materials shall be in a manner and form substantially equivalent to the means by which access is provided under this Agreement.

X. Warranties

Subject to the Limitations set forth elsewhere in this Agreement:

Licensor warrants that it has the right to license the rights granted under this Agreement to use Licensed Materials, that it has obtained any and all necessary permissions from third parties to license the Licensed Materials, and that use of the Licensed Materials by Authorized Users in accordance with the terms of this Agreement shall not infringe the copyright of any third party.

XI. Limitations on Warranties

Notwithstanding anything else in this Agreement:

Neither party shall be liable for any indirect, special, incidental, punitive or consequential damages, including but not limited to loss of data, business interruption, or loss of profits, arising out of the use of or the inability to use the Licensed Materials.

Licensor makes no representation or warranty, and expressly disclaims any liability with respect to the content of any Licensed Materials, including but not limited to errors or omissions contained therein, libel, infringement of rights of publicity, privacy, trademark rights, moral rights, or the disclosure of confidential information.

Except for the express warranties stated herein, the Licensed Materials are provided on an "as is" basis, and Licensor disclaims any and all other warranties, conditions, or representations (express, implied, oral or written), relating to the Licensed Materials or any part thereof, including, without limitation, any and all implied warranties of quality, performance, merchantability or fitness for a particular purpose. Licensor makes no warranties respecting any harm that may be caused by the transmission of a computer virus, worm, time bomb, logic bomb or other such computer program. Licensor further expressly disclaims any warranty or representation to Authorized Users, or to any third party.

XII. Assignment and Transfer

Neither party may assign, directly or indirectly, all or part of its rights or obligations under this Agreement without the prior written consent of the other party, which consent shall not be unreasonably withheld or delayed.

XIII. Governing Law

This Agreement shall be interpreted and construed according to, and governed by, the laws of California, excluding any such laws that might direct the application of the laws of another jurisdiction. The federal or state courts located in California shall have jurisdiction to hear any dispute under this Agreement.

XIV. Entire Agreement

This Agreement constitutes the entire agreement of the parties and supersedes all prior communications, understandings and agreements relating to the subject matter hereof, whether oral or written.

XV. Amendment

No modification or claimed waiver of any provision of this Agreement shall be valid except by written amendment signed by authorized representatives of Licensor and Licensee.

Demon Clock

Look through the pages and become acquainted with the various pieces. Read the instructions and study the illustrations to know what/where to cut/fold. Before gluing, always dry-fit the pieces to ensure that they fit properly.

When assembling the model and following the instructions, do not take the illustrations too literally. In many cases, pieces will be simplified. Other times, pieces (or entire sections) may be missing that were once displayed. This does not mean you should disassemble your model—ever.

Paper model ©2006 Robert Nava & The Disney Experience. All names and images are © & TM of their respective owners. This model is in no way affiliated with the Walt Disney Company, and it is for entertainment purposes.

1. Glue pieces 1D-F together as shown, printed sides facing out.
2. Glue pieces 1G to pieces 1E.
3. Glue pieces 1A & B together, then glue to pieces 1D & G.
4. Glue pieces 1H-L together as shown, printed sides facing in.
5. Slide the inner casing into the outer casing. For proper placement, fold and glue the bottom tabs of the outer casing to the bottom of the inner casing. Then, glue the inner casing's upper tab to provide support.
6. Glue pieces 2A-D to each other to form the pendulum.
7. Assemble piece 2E and slide it through the pendulum's small hole. Align the pendulum onto the dotted line on piece 2E and glue into place.
8. Insert the pendulum into the slot in the clock's casing. Be sure that the face of the pendulum is facing forward.
9. Assemble pieces 2F as shown. Slide them over the ends of piece 2E and glue them to the top of the clock casing, lining them up with the dotted lines. Take care that glue doesn't get everywhere; the pendulum must be able to swing freely.
10. Assemble pieces 2G & I. Glue pieces 2G-I as shown. Some pieces may be a tight fit; be patient.
11. Fold and glue pieces 2J to themselves, then let dry. Assemble piece 2K and glue between pieces 2J. Make sure that pieces 2J are parallel to each other.

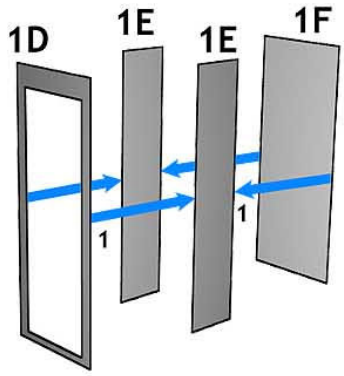

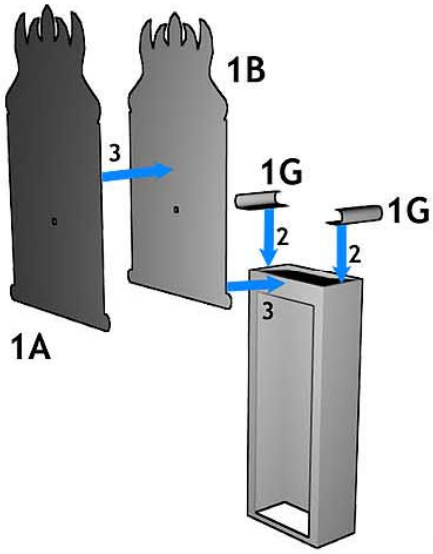

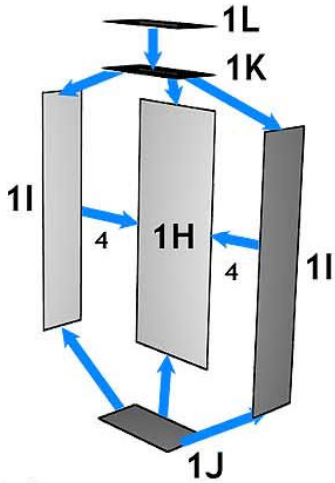

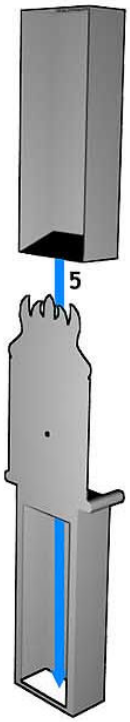

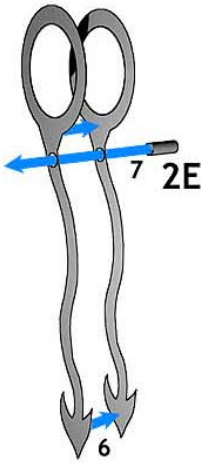

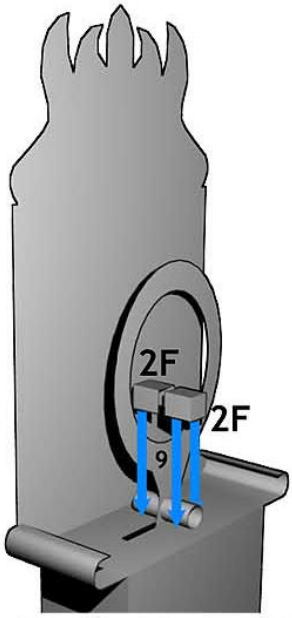

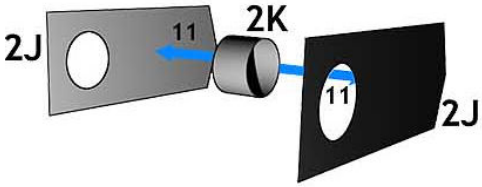

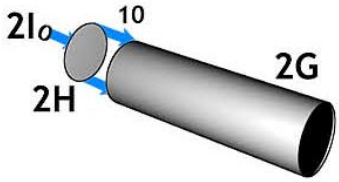

Paper model ©2006 Robert Nava & The Disney Experience. All names and images are © & TM of their respective owners. This model is in no way affiliated with the Walt Disney Company, and it is for entertainment purposes.

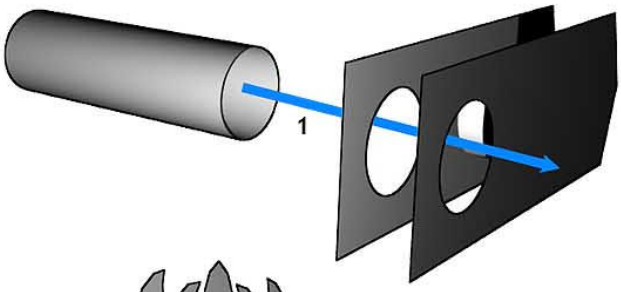

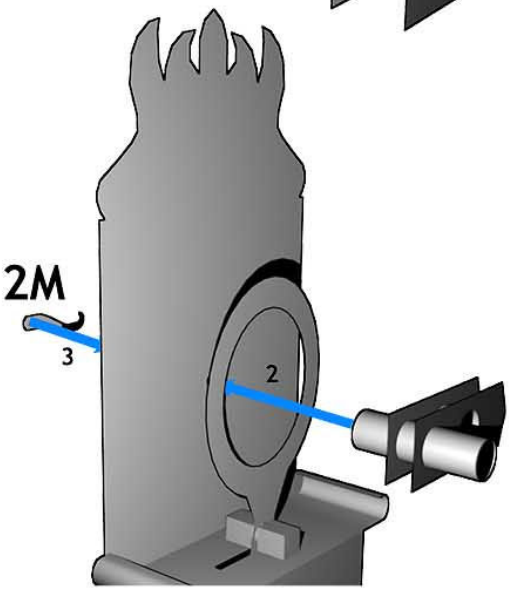

1. Slide the central shaft through pieces 2J. The pieces might be a tight fit, so be patient. Align pieces 2J over the dotted lines and glue in place.
2. Insert the mechanism through the pendulum's ring and insert the tip through the hole in the clock face. If the hole in the clock face is too small, use your x-acto knife to widen it. It's important that you make sure that the pendulum's ring is between pieces 2J.
3. Glue piece 2M to the end of the mechanism that is protruding from the clock face. Be careful when you are gluing this piece; the mechanism and clock hand must be able to spin freely. Before continuing, let this part completely dry so that it has enough strength to withstand some slight tugging.
4. Assemble piece 1C as shown, then glue to the back of the clock. Make sure that the free end of the mechanism's shaft pokes through the hole in piece 1C (do not glue).
5. Assemble piece 3C, then insert it into piece 3A. Glue piece 3B to the end of piece 3C and let dry.
6. Slide piece 3D over the opposite end of piece 3C. Slide it all of the way down, sandwiching piece 3A between pieces 3B & D. Apply tiny dots of glue to secure piece 3D to piece 3C. When dry, the handle should be free to spin.
7. Glue the handle to the end of the mechanism that is protruding from the back of the clock. Be careful when gluing; the handle and mechanism must be free to spin.
8. When everything is dry, test the clock's mechanics by slowly turning the handle clockwise. The minute hand should spin counter-clockwise (as it does in the attraction), and the pendulum should swing from side to side.

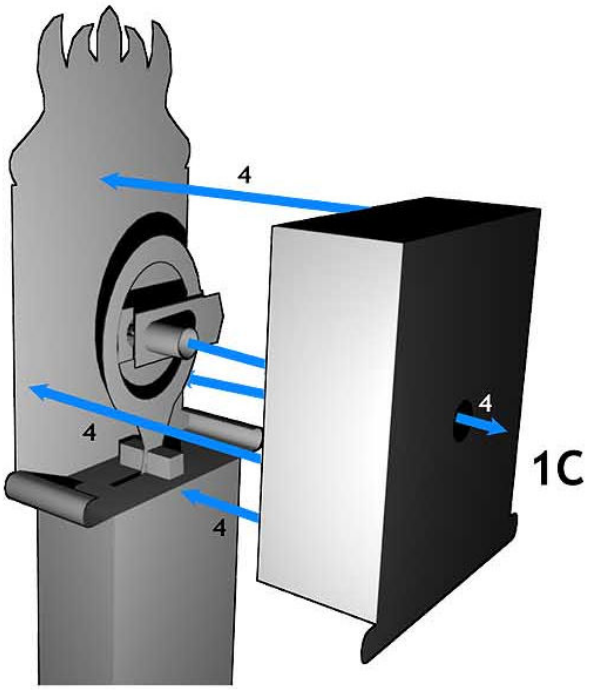

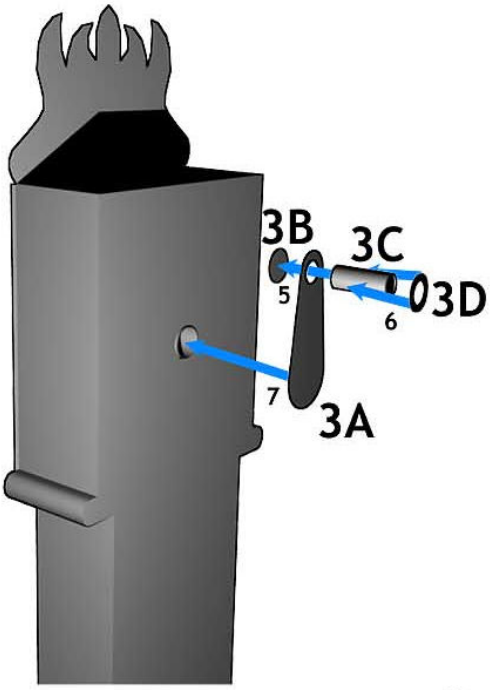

Paper model ©2006 Robert Nava & The Disney Experience. All names and images are © & TM of their respective owners. This model is in no way affiliated with the Walt Disney Company, and it is for entertainment purposes.

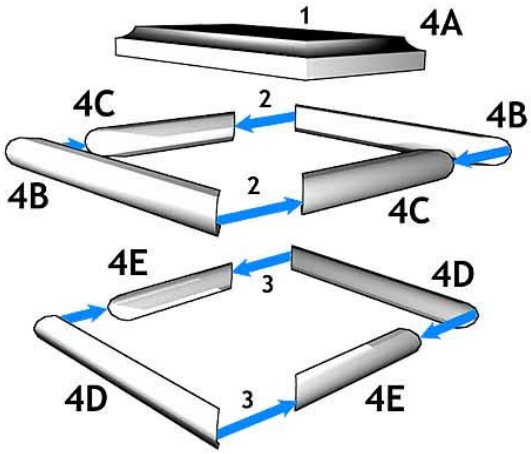

1. Assemble piece 4A as shown. For the rounded bevel, it helps to gently curve the areas before assembeling.
2. Glue pieces 4B & C together.
3. Glue pieces 4D & E together.
4. Glue the three layers to each other .
5. Glue pieces 4F together to form a box. Insert and glue pieces 4F to the bottom of piece 4A.
6. Glue piece 4G to the bottom of pieces 4D-F.

Take note that from this point forward, the model assembly increases in difficulty. It's recommended that you let pieces dry every now and then so that you can tug & pull when you need to. Take your time and be very patient!

7. Glue pieces 4H & I.
8. Glue pieces 4K to each leg. Try to be precise as possible; the tiniest deviation will result in warped legs. Since it's impossible to be absolutely perfect, you WILL have slightly warped legs. Don't let this discourage you!
9. Glue piece 4J to the bottom of the leg base.
10. Glue piece 4L to the bottom of the feet. This will help fix some of the warping and keep the feet sit flat. Four different variations of piece 4L are available so that you can choose which one will best blend with the display shelf/area.
11. Glue the foot base to piece 4G.
12. Glue the upper clock assembly to the base.

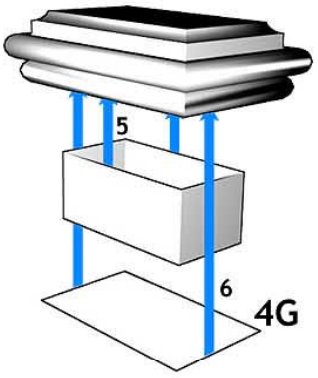

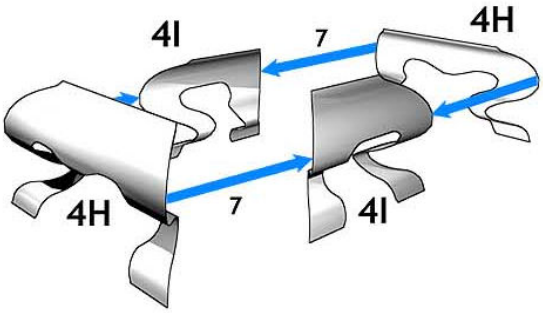

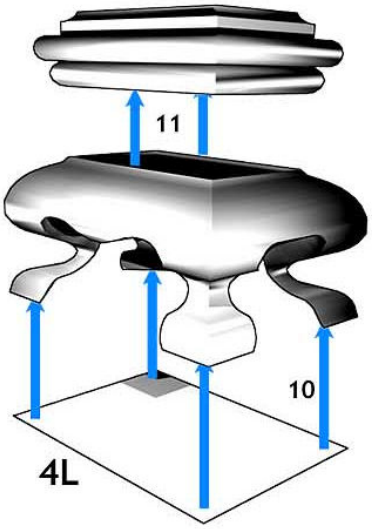

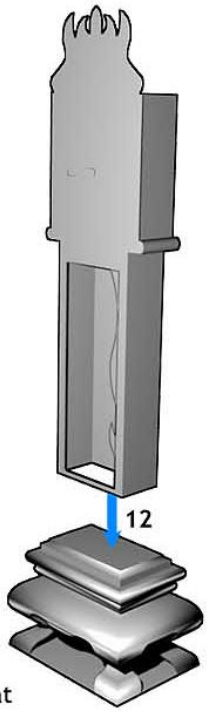

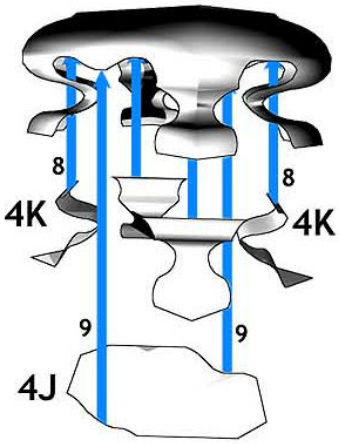

Congratulations! You've completed the model.

Even more haunting projects are waiting for you at

THE DISNEY EXPERIENCE
ADD A TOUCH OF DISNEY MAGIC TO YOUR COMPUTER

www.disneyexperience.com

Paper model ©2006 Robert Nava & The Disney Experience. All names and images are © & TM of their respective owners. This model is in no way affiliated with the Walt Disney Company, and it is for entertainment purposes.